AN103801 THRU AN103900

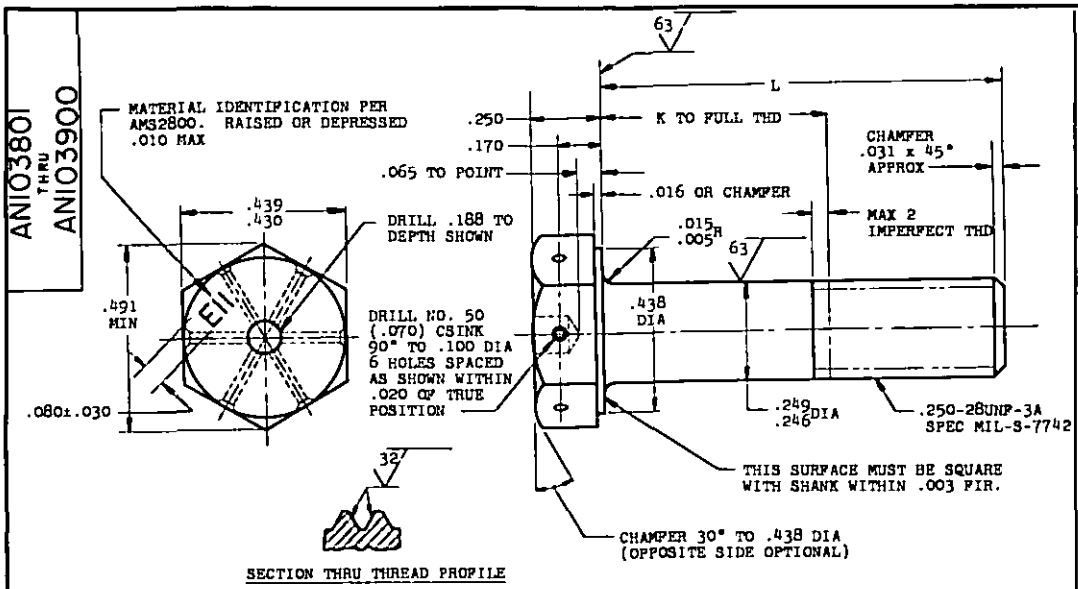

SECTION THRU THREAD PROFILE

L	K +.000 -.060	PART NO.	L	K +.000 -.060	PART NO.	L	K +.000 -.060	PART NO.	L	K +.000 -.060	PART NO.
			1.312	.562	AN103819	2.625	1.875	AN103833	4.375	3.625	AN103847
.500	(a)	AN103806	1.375	.625	AN103820	2.750	2.000	AN103834	4.500	3.750	AN103848
.562	(a)	AN103807	1.438	.688	AN103821	2.875	2.125	AN103835	4.625	3.875	AN103849
.625	(a)	AN103808	1.500	.750	AN103822	3.000	2.250	AN103836	4.750	4.000	AN103850
.688	(a)	AN103809	1.562	.812	AN103823	3.125	2.375	AN103837	4.875	4.125	AN103851
.750	(a)	AN103810	1.625	.875	AN103824	3.250	2.500	AN103838	5.000	4.250	AN103852
.812	(a)	AN103811	1.688	.938	AN103825	3.375	2.625	AN103839	5.125	4.375	AN103853
.875	.125	AN103812	1.750	1.000	AN103826	3.500	2.750	AN103840	5.250	4.500	AN103854
.938	.188	AN103813	1.875	1.125	AN103327	3.625	2.875	AN103341	5.375	4.625	AN103855
1.000	.250	AN103814	2.000	1.250	AN103828	3.750	3.000	AN103842	5.500	4.750	AN103856
1.062	.312	AN103815	2.125	1.375	AN103829	3.375	3.125	AN103843	5.625	4.875	AN103857
1.125	.375	AN103816	2.250	1.500	AN103830	4.000	3.250	AN103844	5.750	5.000	AN103858
1.188	.438	AN103817	2.375	1.625	AN103831	4.125	3.375	AN103845	5.875	5.125	AN103859
1.250	.500	AN103818	2.500	1.750	AN103832	4.250	3.500	AN103846	6.000	5.250	AN103860

(a) THREAD TO HEAD. MAXIMUM TWO IMPERFECT THREADS.

NOTE: (1) SHANK SHALL BE STRAIGHT WITHIN .003 FIR. PER INCH OF BOLT LENGTH.
(2) THE CONCENTRICITY OF THREAD PD IN RELATION TO THE SHANK SHALL BE WITHIN .006 FIR.
(3) THE CONCENTRICITY OF THE SHANK IN RELATION TO THE WASHER FACE DIAMETER AND HEXAGON SHALL BE WITHIN .013 FIR.

MATERIAL: STEEL AMS6322

HARDNESS: ROCKWELL C26-32

FINISH: CADMIUM PLATE AMS2400

SURFACE ROUGHNESS: AS107

MANUFACTURING SPECIFICATION: AM37452 PARTS SUBJECT TO MAGNETIC INSPECTION PER AMS2640.

BREAK SHARP EDGES .003-.015 UNLESS OTHERWISE SPECIFIED.

DIMENSIONS IN INCHES. UNLESS OTHERWISE SPECIFIED: TOLERANCES; LINEAR DIMENSIONS ±.010, ANGULAR DIMENSIONS ±2°.

DO NOT USE UNASSIGNED PART NUMBERS.

② INACTIVE FOR NEW DESIGN AFTER 3 MARCH 1969 NO SUPERSEDING STANDARD.

THIS STANDARD WAS DEVELOPED COOPERATIVELY BY THE ENGINE AND PROPELLER UTILITY PARTS COMMITTEE OF THE SAE.

APPROVED 8 June 49 REVISED ① 11 Aug 54 ② 3 Mar 69

PROCUREMENT SPECIFICATION	AIR FORCE-NAVY AERONAUTICAL STANDARD	AN103801 THRU AN103900
	BOLT - DRILLED HEX HEAD, 6 HOLES, .250-28	

NOTICE: When Government drawings, specifications, or other data are used for any purpose other than in connection with a definitely related Government procurement operation, the United States Government thereby incurs no responsibility, nor any obligation whatsoever; and the fact that the Government may have furnished, furnished, or in any way supplied the said drawings, specifications, or other data is not to be regarded by implication or otherwise in any manner licensing the holder or any other person or corporation, or conveying any rights or permission to manufacture, use, or sell any patented invention that may in any way be related thereto.

NOTE: This drawing was approved by joint action of the Air Force and Navy Departments as the Air Force-Navy standard for this product. This drawing supersedes all extensions standard drawings for the same product and shall become effective for the procurement of nonstandard supplies, or for use in new designs, not later than 6 months after the issued date of approval thereof.